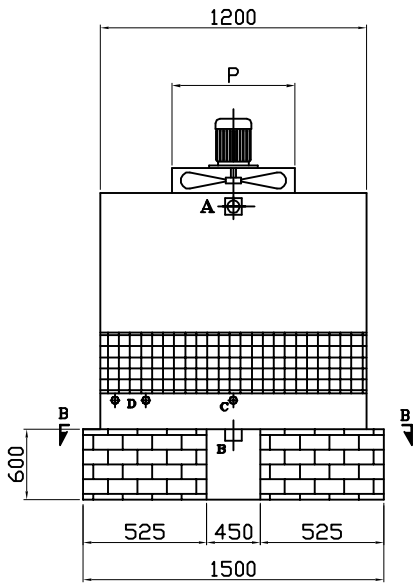

ELEVATION

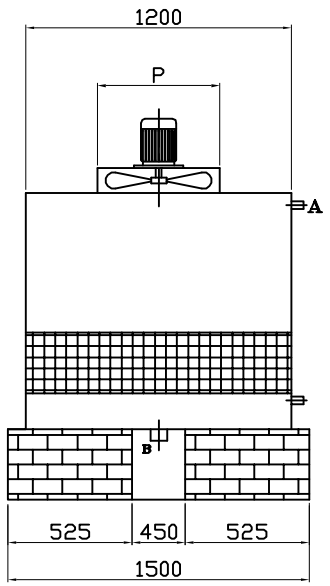

SIDE VIEW

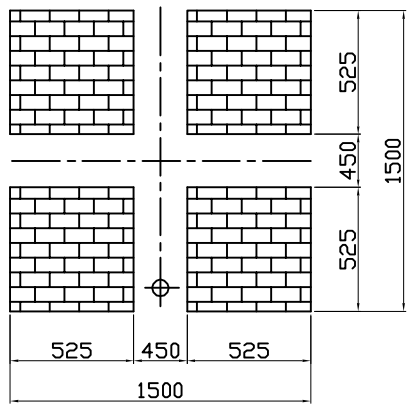

PLAN

DISCRIPTION	MARK	SIZES
INLET PIPE CONNECTION	A	3" X 1 No
OUT LET PIPE CONNECTION	B	3" X 1 No.
DRAIN & OVERFLOW CONNECTION	C	2" EACH
MAKE UP AND QUICKFILL CONNECTION	D	1.5" EACH
LENGTH OF COOLING TOWER		1200
WIDTH OF COOLING TOWER		1200
FAN DIA AND NOS.	P	ø900 X 1 No.

NOTES:–

1 ALL DIMENSIONS ARE IN MILIMETERS UNLESS OTHERWISE STATED

2 COOLING TOWER WILL BE ASSEMBLED ON BRICK PILLER

3 MAKEUP AND QUICKFILL CONNECTION TO BE PROVIDED WITH THREAD CONNECTIONS AS PER IS –544–1955

4 INLET AND OUTLET CONNECTION TO BE PROVIDED WITH FLANGE CONNECTIONS AS PER TABLE "E" OF ISI.

5. BRICK PILLER 525 X 525 X 600 HEIGHT

DELTA COOLING TOWERS P. LTD.

SITE: –

DES.
DRN. Sanju
CHKD.
APPD.
SCALE NOT TO SCALE

G.A OF DRG. OF COOLING TOWER MODEL NO.6030/6035 SERIES– DFC 60

JOB NO.

REV–0

L M N