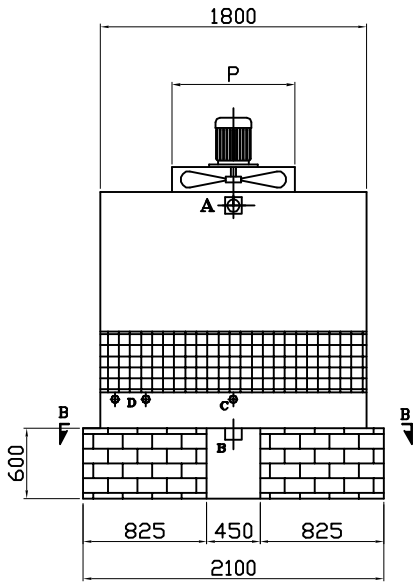

ELEVATION

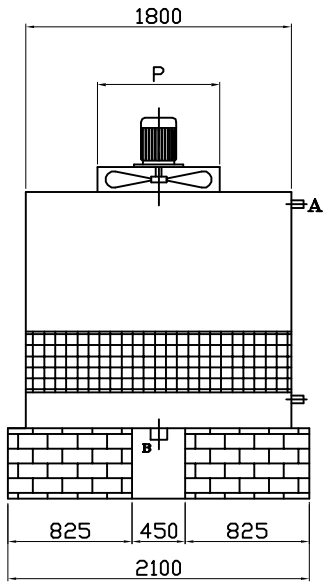

SIDE VIEW

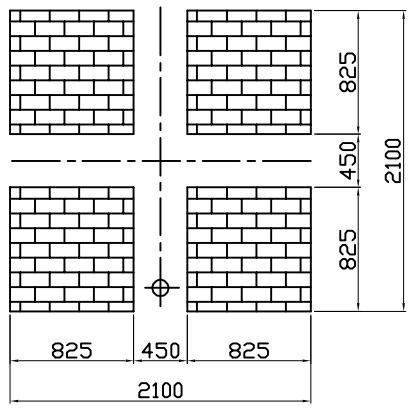

PLAN

NOTES:–

1. ALL DIMENSIONS ARE IN MILIMETERS UNLESS OTHERWISE STATED
2. COOLING TOWER WILL BE ASSEMBLED ON BRICK PILLER
3. MAKEUP AND QUICKFILL CONNECTION TO BE PROVIDED WITH THREAD CONNECTIONS AS PER IS –544–1955
4. INLET AND OUTLET CONNECTION TO BE PROVIDED WITH FLANGE CONNECTIONS AS PER TABLE "E" OF ISI.
5. BRICK PILLER 825 X 825 X 600 HEIGHT

DISCRIPTION	MARK	SIZES
INLET PIPE CONNECTION	A	4" X 1 No
OUT LET PIPE CONNECTION	B	4" X 1 No.
DRAIN & OVERFLOW CONNECTION	C	2" EACH
MAKE UP AND QUICKFILL CONNECTION	D	1.5" EACH
LENGTH OF COOLING TOWER		1800
WIDTH OF COOLING TOWER		1800
FAN DIA AND NOS.	P	ø1200 X 1 No.

DELTA COOLING TOWERS P. LTD.

SITE: –

DES.
DRN. XXXXXXXX
CHKD.
APPD.
SCALE NOT TO SCALE

G.A OF DRG. OF COOLING TOWER MODEL NO.6060/6070 SERIES– DFC 60

JOB NO.

REV–0

L M N