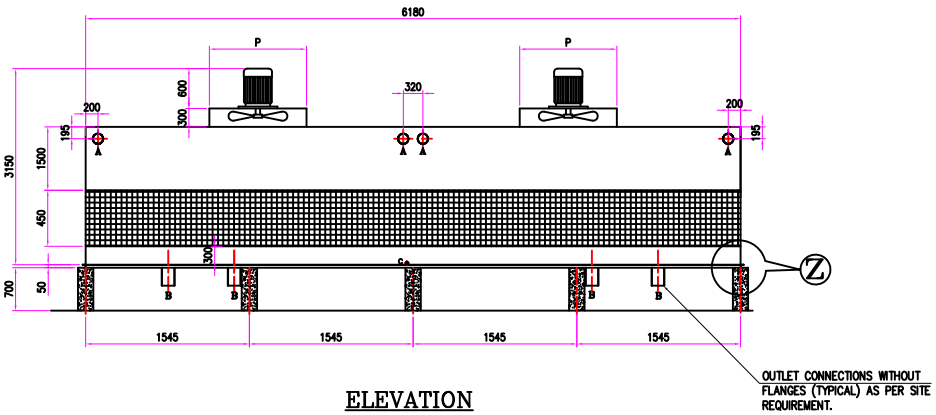

ELEVATION

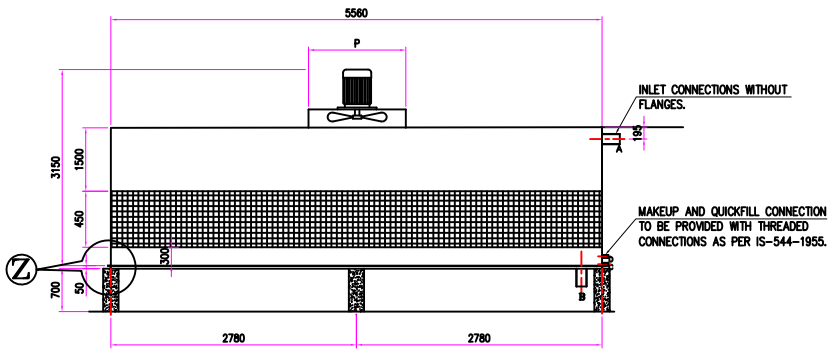

SIDE VIEW

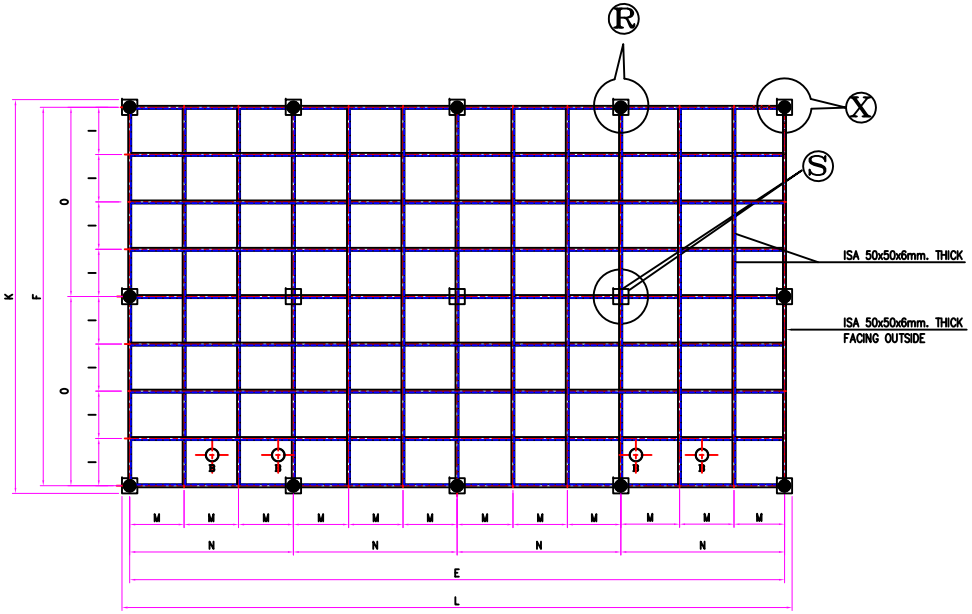

PLAN

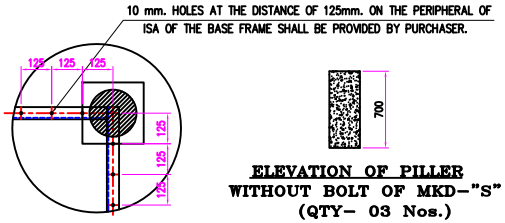

DETAIL-X

ELEVATION OF PILLER WITHOUT BOLT OF MKD-"S" (QTY- 03 Nos.)

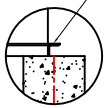

DETAIL-Z

ALL PERIPHERAL ISA (ANGLES) SHALL BE FACED OUTSIDE AND THE BASE FRAME SHALL BE PROVIDED BY PURCHASER.

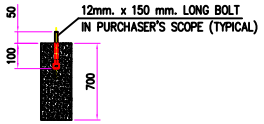

ELEVATION OF PILLER WITH BOLT IN THE CENTER OF MKD-"R" (QTY- 12 Nos.)

K	F	O	I	L	E	N	M	P
5810	5560	2780	695	6430	6180	1545	515	2400

DISCRIPTION	MARK	SIZES
INLET PIPE CONNECTION	A	150 x 4 NOS
OUT LET PIPE CONNECTION	B	150 x 4 NOS.
DRAIN & OVERFLOW CONNECTION	C	50 EACH
MAKE UP AND QUICKFILL CONNECTION	D	40 EACH
LENGTH OF COOLING TOWER	E	6180
WIDTH OF COOLING TOWER	F	5560
FAN DIA AND NOS.	P	ø2400 x 2 Nos.

NOTES:-

1. ALL DIMENSIONS ARE IN MILIMETERS UNLESS OTHERWISE STATED.
2. COOLING TOWER WILL BE ASSEMBLED ON ISA FRAME FIXED ON RCC PILLAR THE FRAME IS UNDER PURCHASERS SCOPE.
3. MAKEUP AND QUICKFILL CONNECTION TO BE PROVIDED WITH THREAD CONNECTIONS AS PER IS-544-1955.
4. INLET & OUTLET CONNECTION TO BE PROVIDED WITHOUT FLANGE.
5. RCC BASIN AND RCC PILLERS 250x250x700 HEIGHT AND ø12x 150 LONG BOLTS ARE UNDER PURCHASER SCOPE.
6. ø10 mm HOLE AT THE DISTANCE OF 5" ON THE PERIPHERAL OF ISA OF THE BASE FRAME SHALL BE PROVIDED BY PURCHASER.
7. LOCATION OF OUTLET CONNECTION ACCORDING TO SITE REQUIREMENT.
8. ø12x150 LONG BOLTS SHALL BE GROUTED IN THE CENTRE OF OUTER COLUMNS AS SHOWN IN THE DRAWING.
9. ALL ISA (ANGLES) ON PERIPHERAL WILL FACE OUTSIDE ie ⊓.

DELTA COOLING TOWERS P. LTD.

SITE:-

DES.			G.A OF DRG. OF COOLING TOWER MODEL NO. 6700 SERIES- DFC 60
DRN.		26.11.14	
CHKD.			
APPD.			
SCALE NOT TO SCALE			
JOB NO.			REV-0